CanCom

8 ANALOG-JOY

JÖRGENSEN

ANALOG-JOY

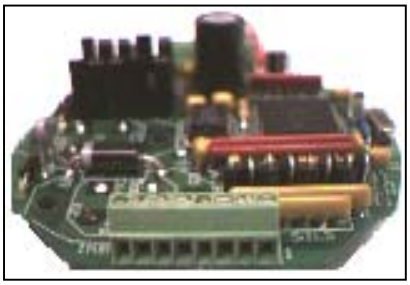

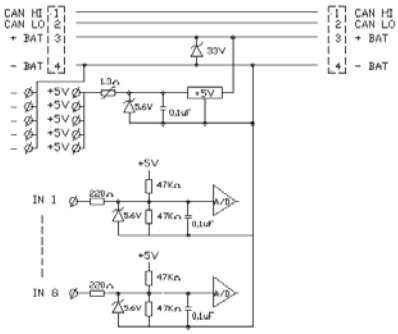

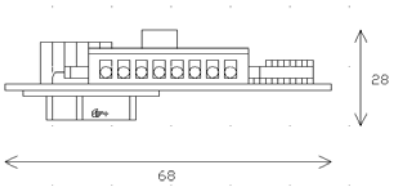

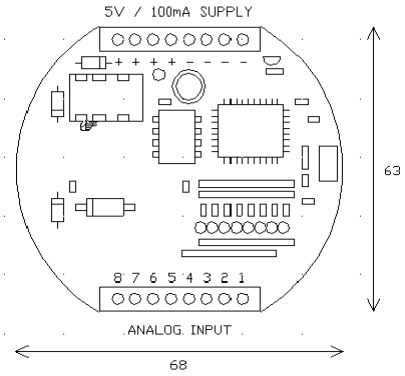

Specifikation	Specification		
Matningsspänning	Power supply	10-30	VDC
Spänningsrippel	Voltage ripple	<3	V t-t
CAN protokoll	CAN protocol	2.0B	150Kbit
CAN drivkrets	CAN driver	82C251	Philips
Antal I/O	Number of I/O	8	I/O
I/O adress	I/O address	1-25	ID
Modulkontaktdon	Module connectors	G4A5M	Hirschmann
Kabelkontaktdon	Cable connectors	G4W1F	Hirschmann
Operativsystem	Operating system	CanPro	
CPU	CPU	98AZ60	Motorola
Flashminne	Flash memory	60	kB
Egenförbrukning	Internel consumtion	60	mA
Vikt	Mass	0.04	Kg
Omgivningstemp.	Operating temp.	-30 - +50	Celcius

A/D ingångar	A/D inputs		
Antal ingångar	Number of inputs	8	
Insignalsnivå	Inputlevel	0-5	VDC
Upplösning	Resolution	8	bit
Ingångs resistans	Input resistance	47	Kohm
Balanserad ingång	balanced input	2.5	VDC
Max belastning 5V	Maximum load 5V	50	mA
Buss uppdateringstid	Bus update time	25	ms

EMC	EMC		89/336/EEC
Emission	Emission	Industrial	EN55081-2
Immunitet	Immunity	Industrial	EN55082-2
EN61000-4-6	Conducted	10V/80%	0.15-80MHz
EN61000-4-3	Radiated	30V/m 80%	20-1000MHz
EN61000-4-2	ESD	Air/Contact	8/4 KV
ENV 50204	Radiated pulse	30V/m	900MHz / 200
EN61000-4-8	Magnetic field	30A/m	50Hz
ISO 7637-1	12V system	Pulse	4
ISO 7637-2	24V system	Pulse	1a,1b,3a,3b

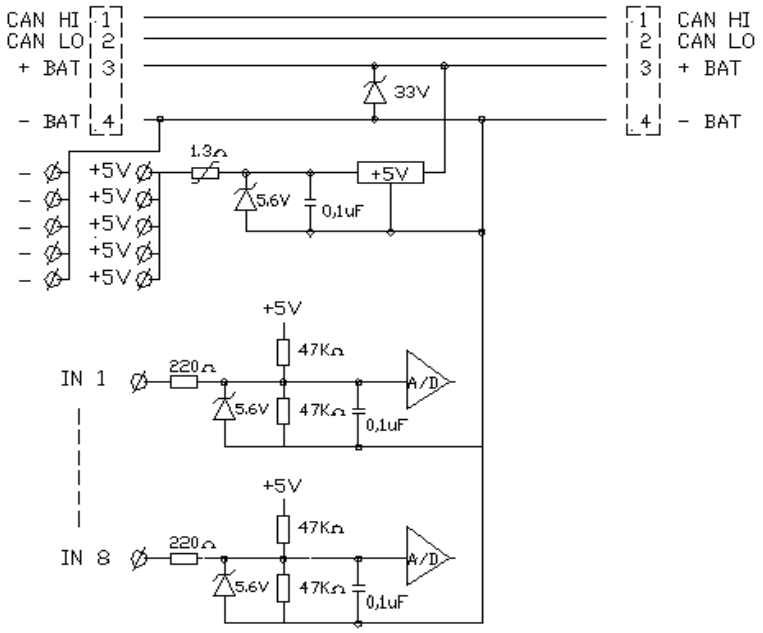
CAN HI
CAN LO
+ BAT
- BAT
1
2
3
4
33V
1.3Ω
+5V
5.6V
0,1uF
IN 1
IN 8
220Ω
47KΩ
A/D

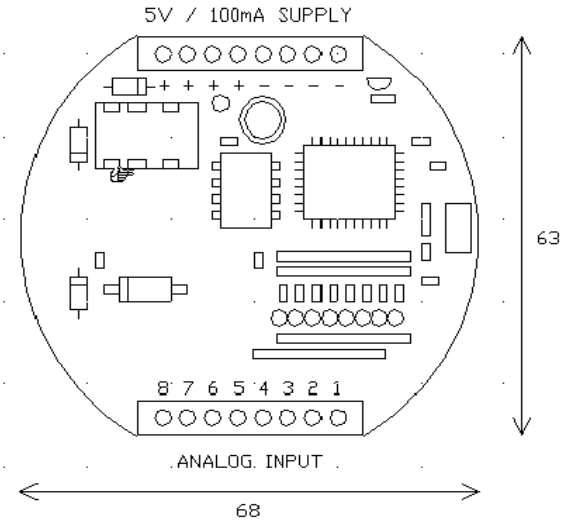
5V / 100mA SUPPLY
8 7 6 5 4 3 2 1
ANALOG INPUT
63
68

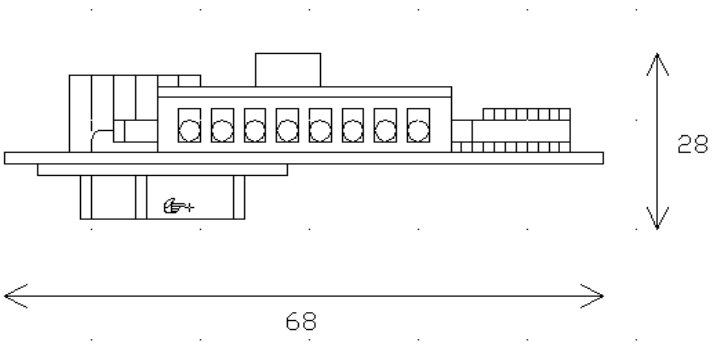
28
68